rath | armster2

SUZUKI JIMNY 2019-

V01041 with pocket	●
V01042 with pocket	○
V01328 without pocket	●
V01329 without pocket	○

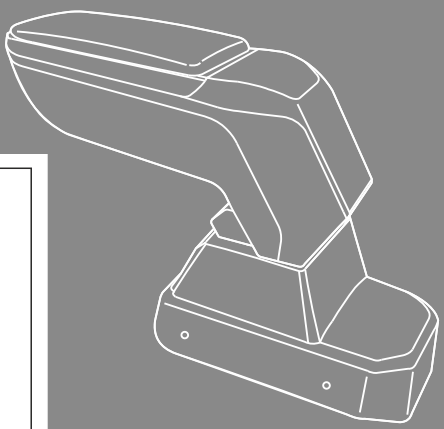

The image may contain optional extras.
(e.g.pocket)

EN	CENTER ARMREST
DE	MITTELARMLEHNE
FR	ACCOUDOIR CENTRAL
ES	APOYABRAZOS CENTRAL
NL	CENTER CONSOLE
IT	APPOGGIA BRACCIO CENTRALE
PT	CONSOLE
HU	KARTÁMASZ
CS	OPĚRKY RUKY
SK	STREDOVA OPIERKA RUKY
SL	NASLON ROKE
HR	NASLON ZA RUKU
RO	COTIERĂ
RU	ПОДЛОКОТНИК
PL	PODŁOKIETNIK
TR	OTOMOBIL KOLÇAĞI

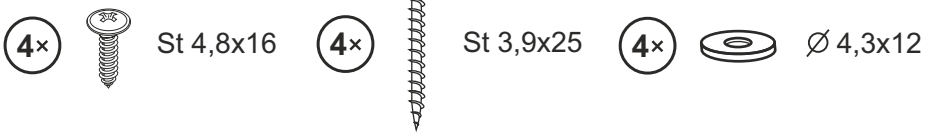

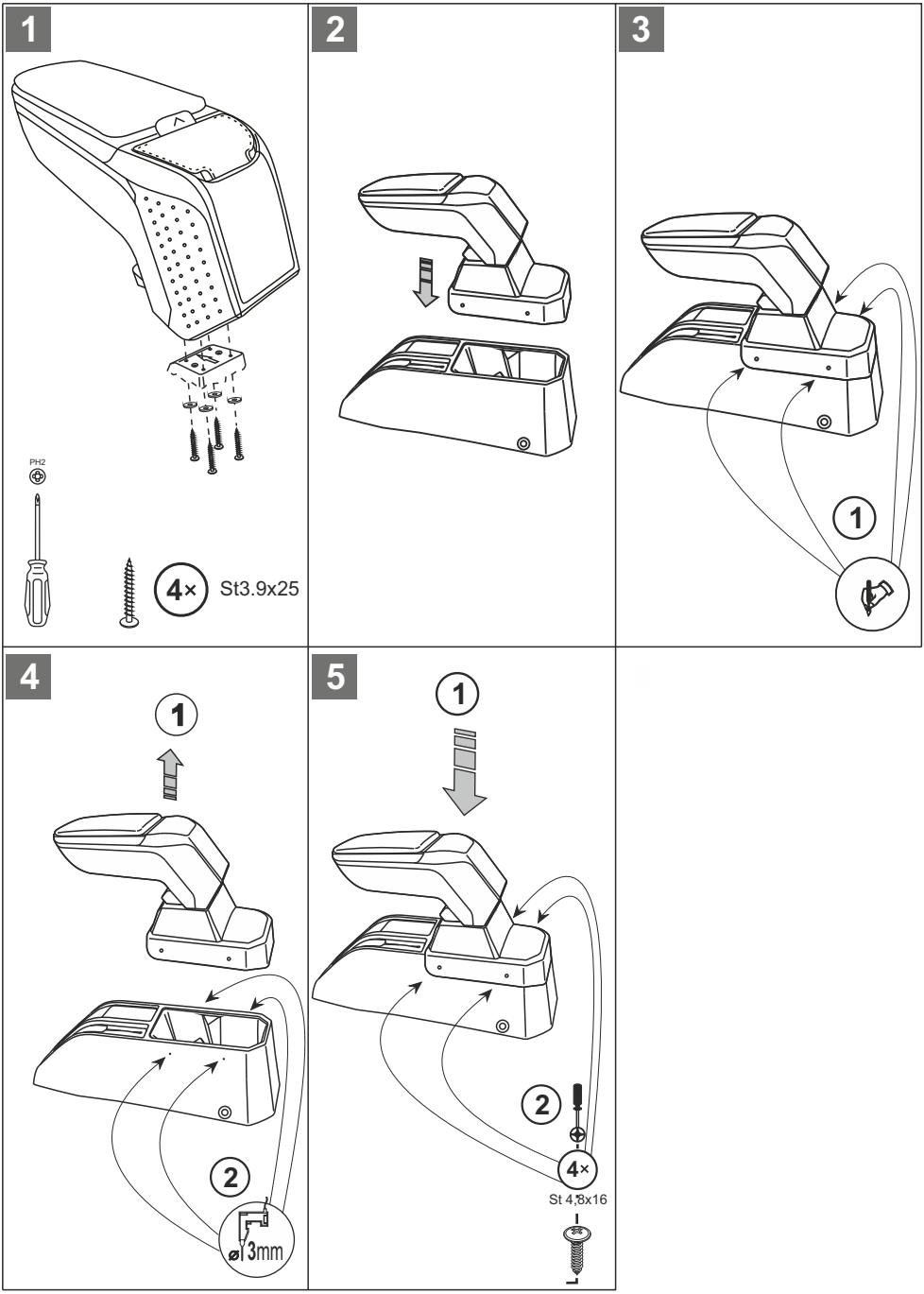
1
PH2
4×
St3.9x25
2
3
1
4
1
2
ø 3mm
5
1
2
4×
St 4,8x16