armster3 seat mounted

DACIA SANDERO 2017-2020 LHD
LOGAN 2017-2020 LHD
DOCKER 2015-2020 LHD

(WITHOUT original elbowrest)

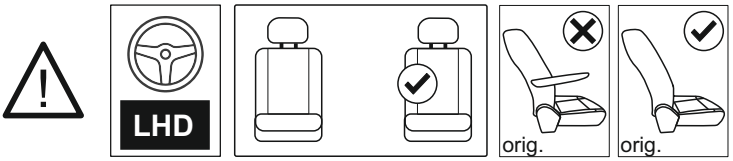

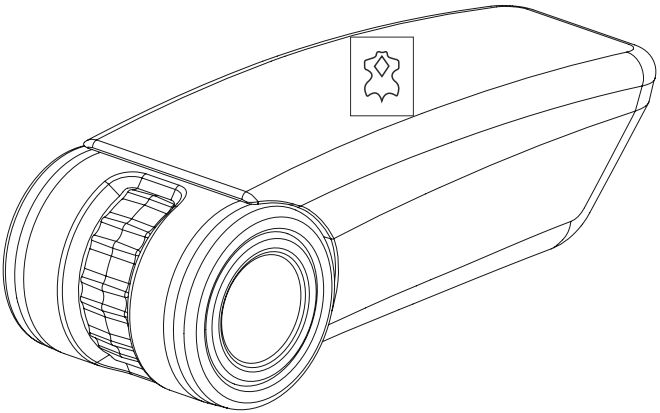

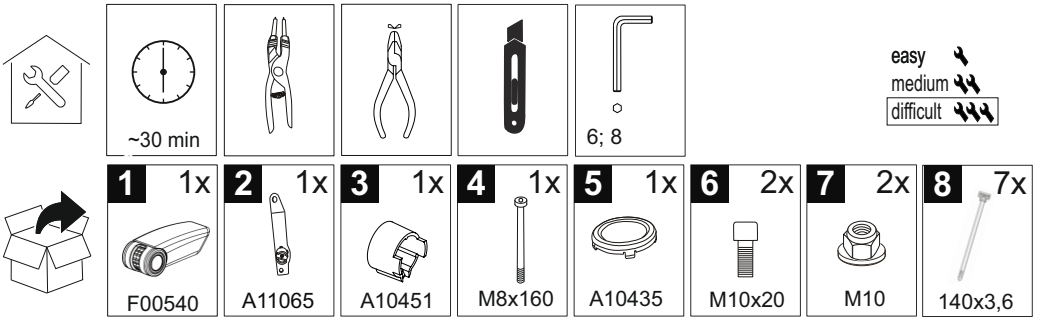

V01082 - 20240220

www.rati.hu

1

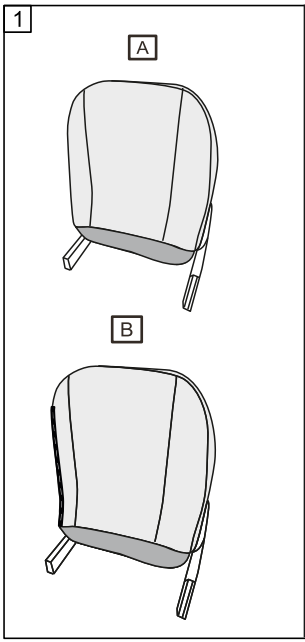

A2 1

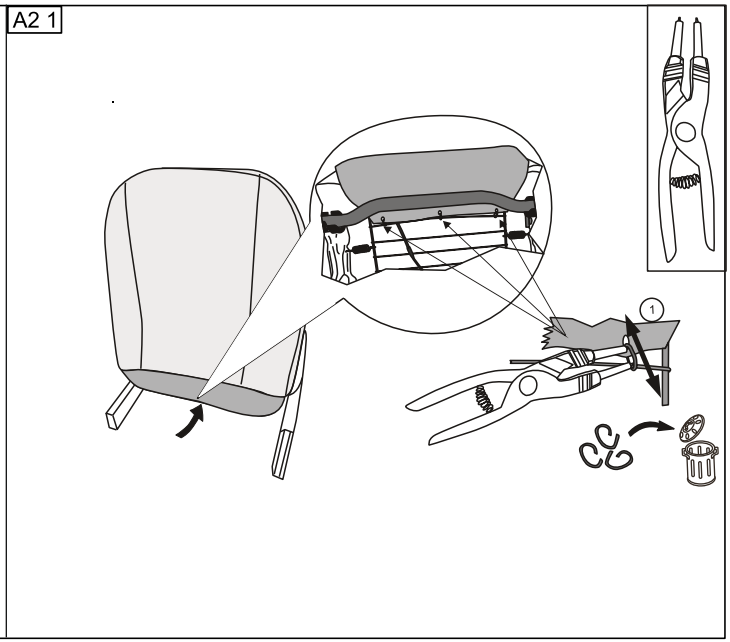

A2.2

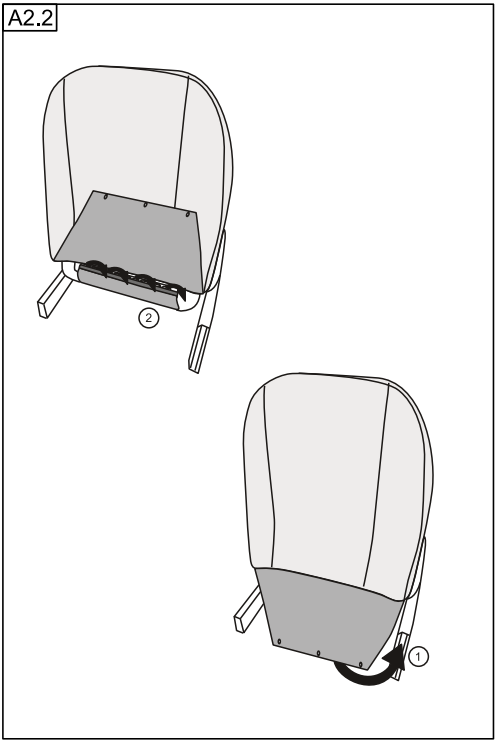

A2.3

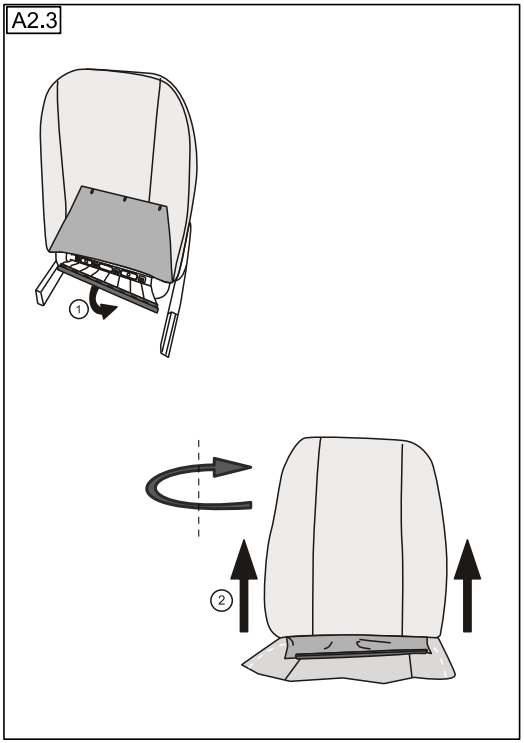

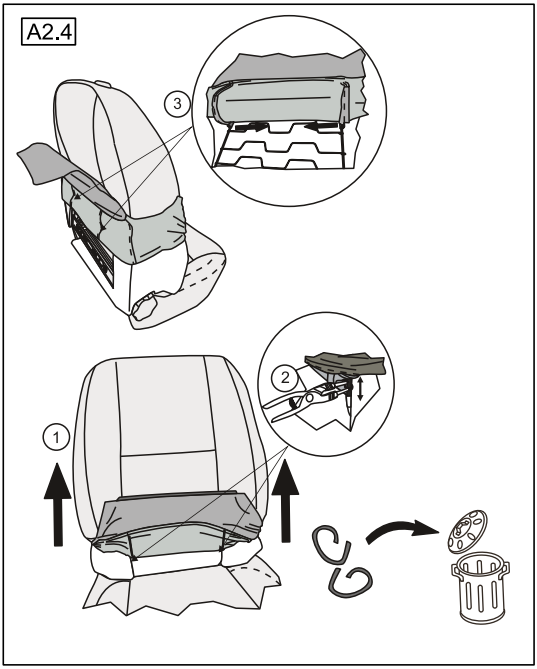
A2.4
3
2
1

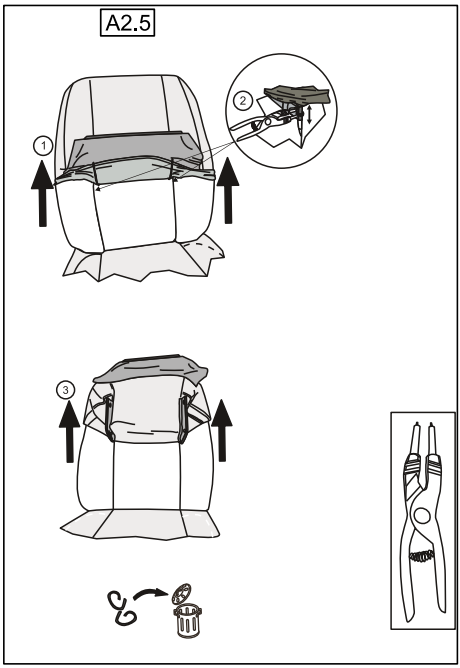
A2.5
2
1
3

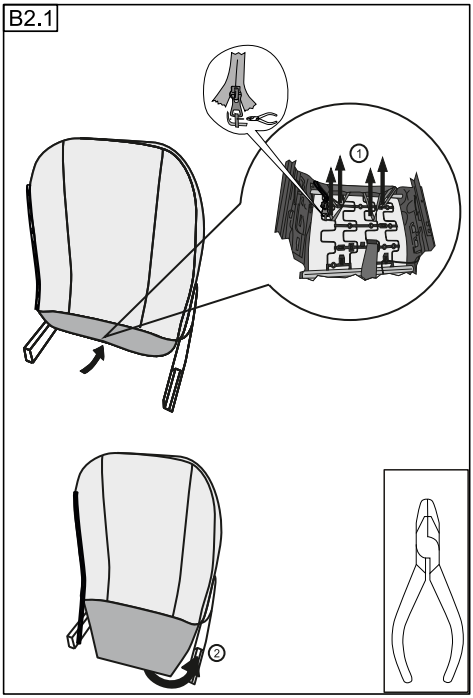
B2.1
1
2

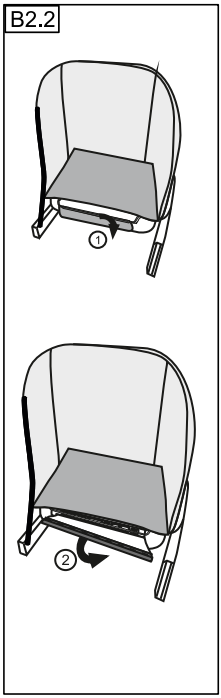
B2.2
1
2

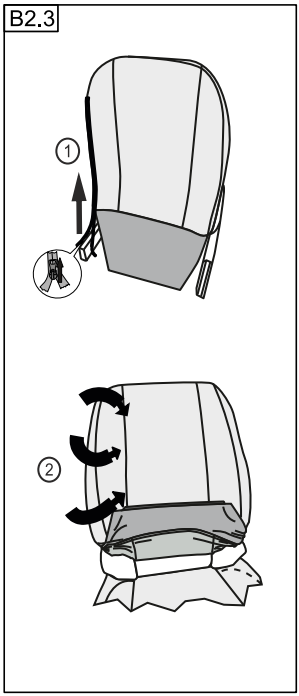
B2.3
1
2

3

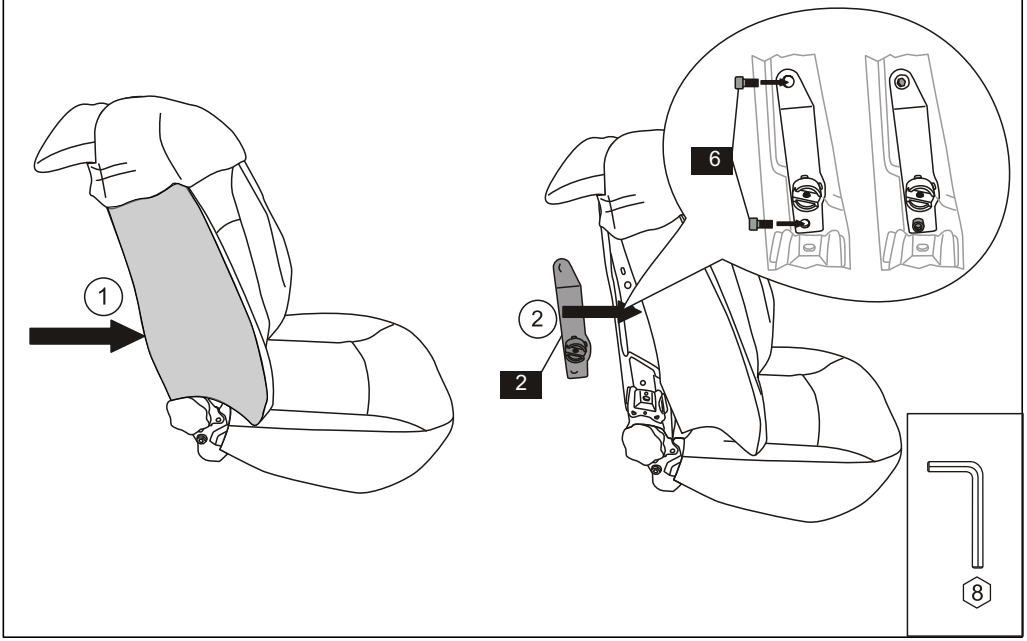

4

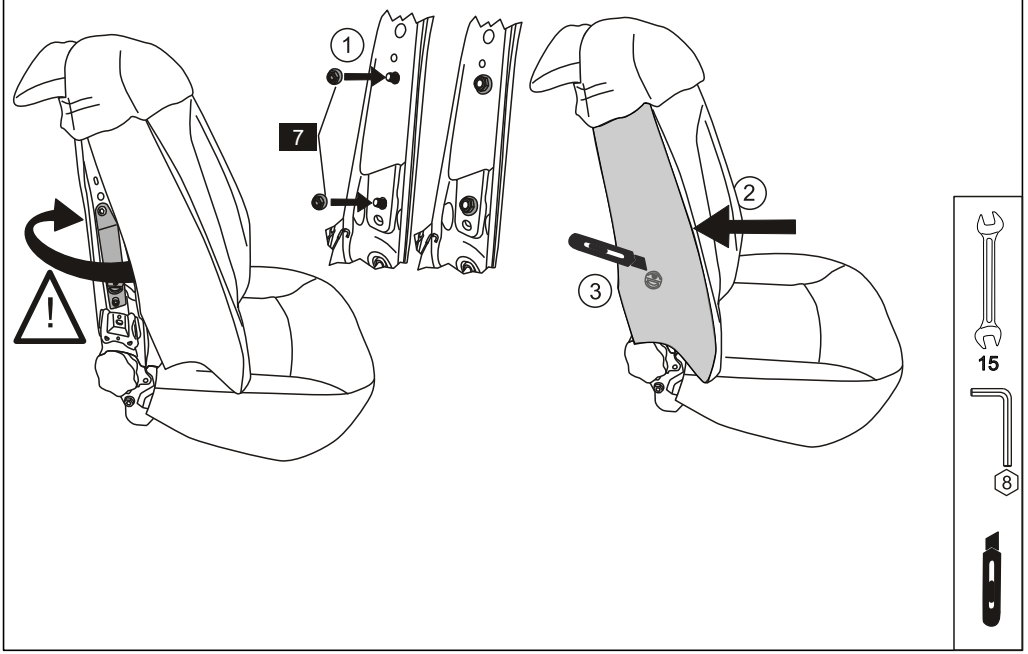

A 5.1

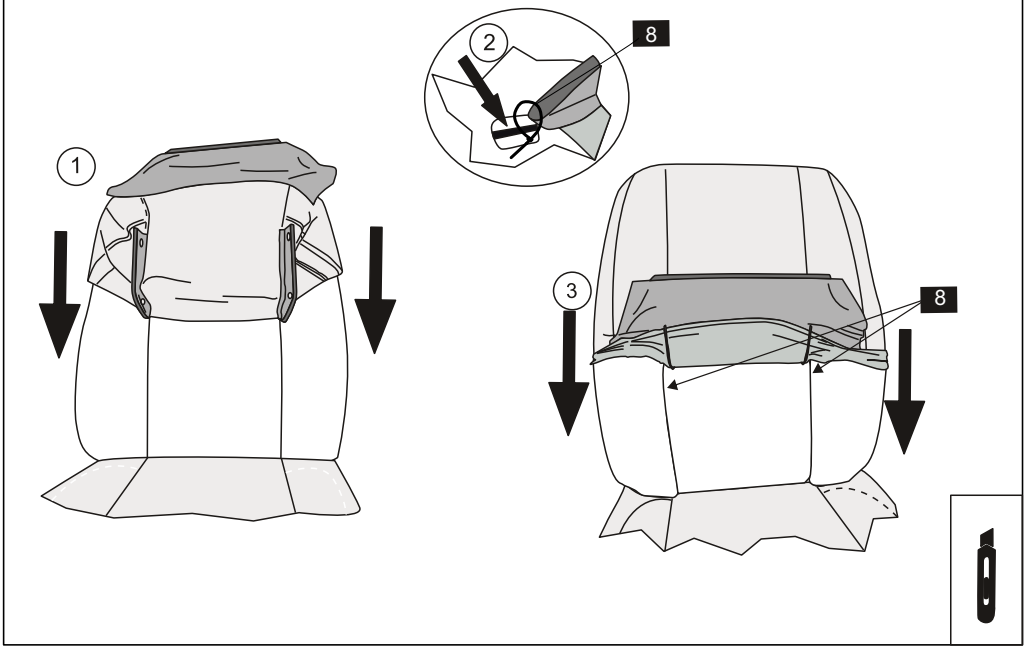

A5.2

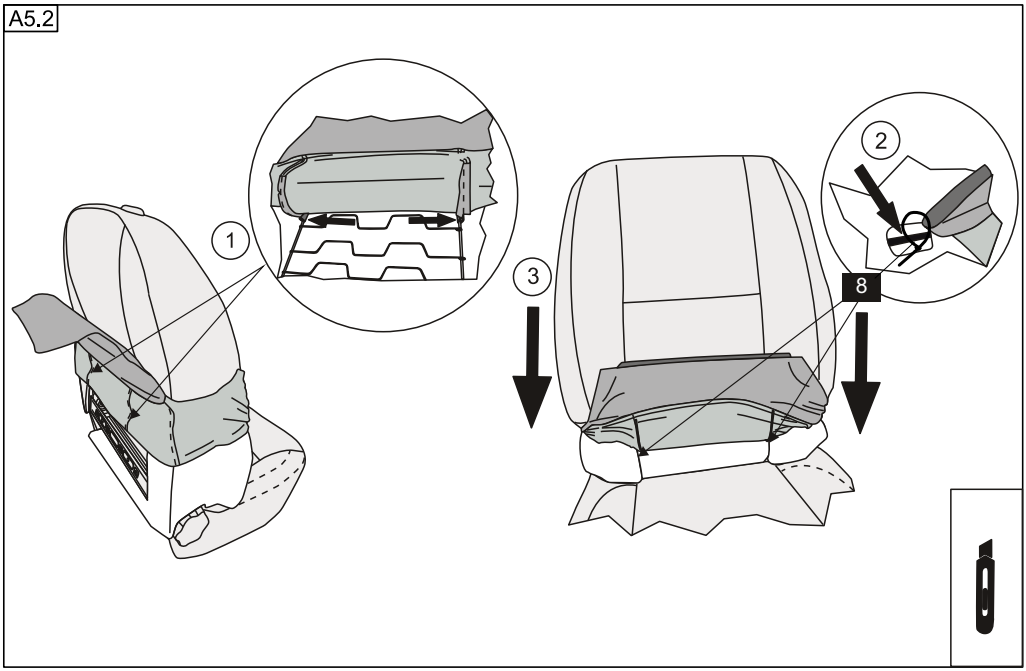

A5.3

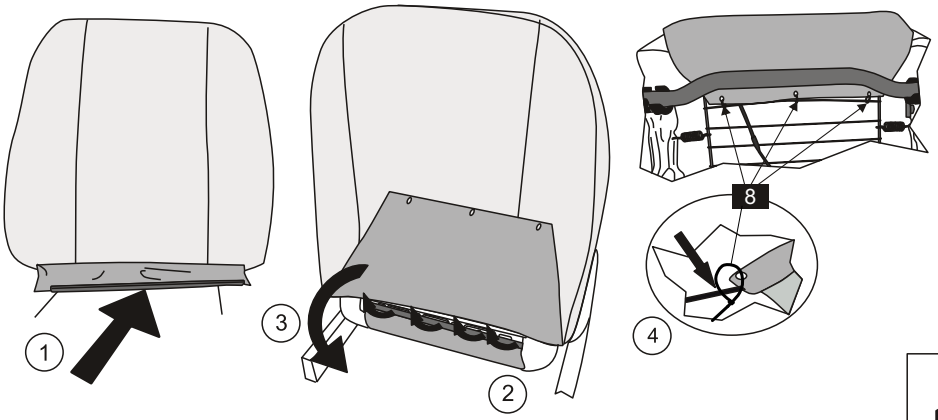

B5.1

B5.2

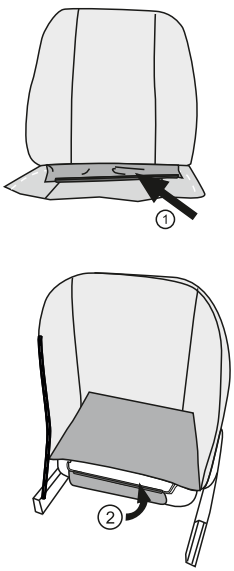

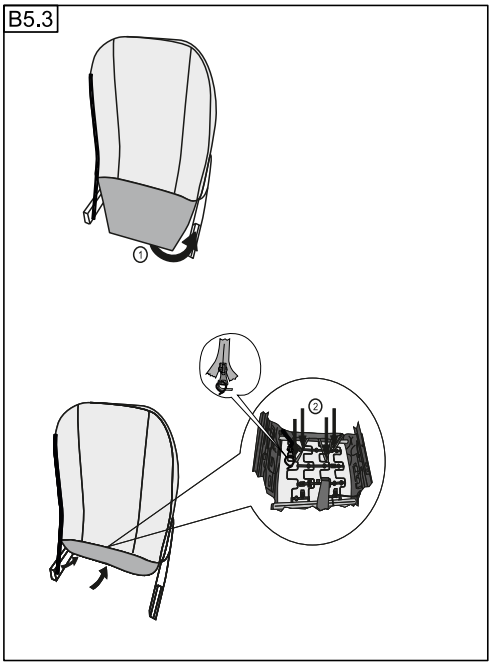
B5.3
1
2

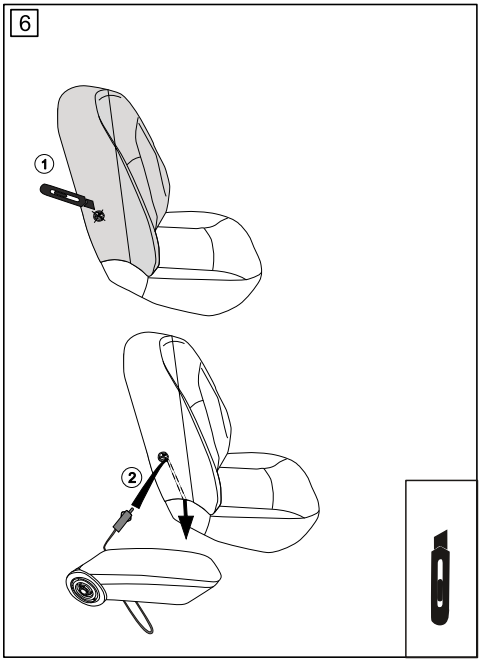
6
1
2

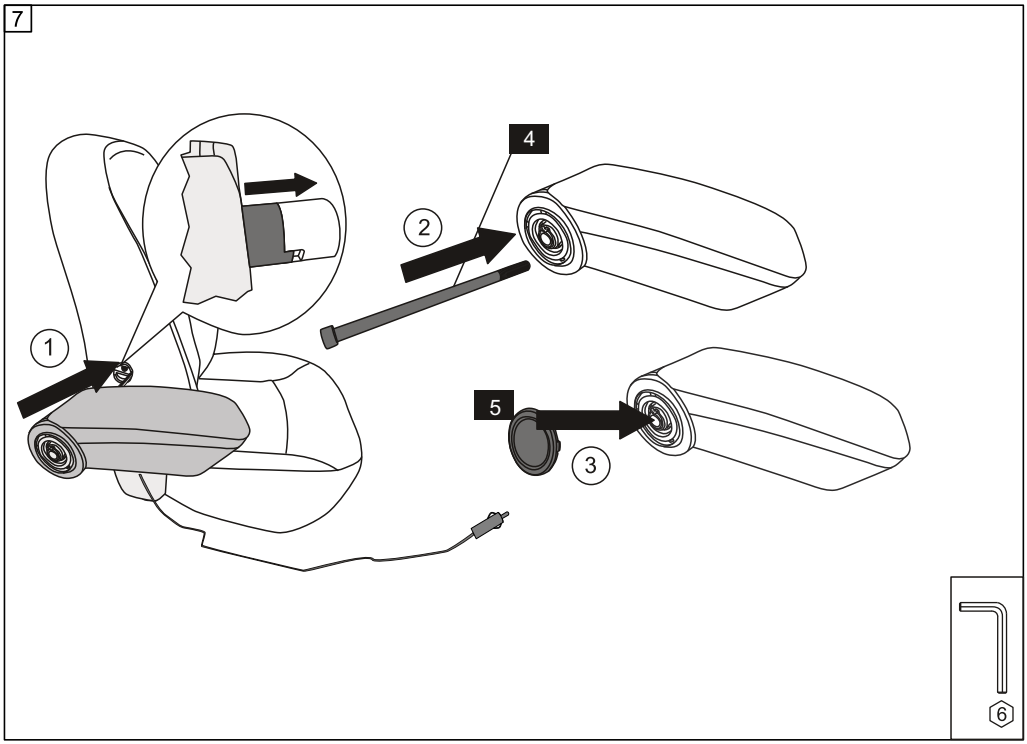
7
1
2
3
4
5
6

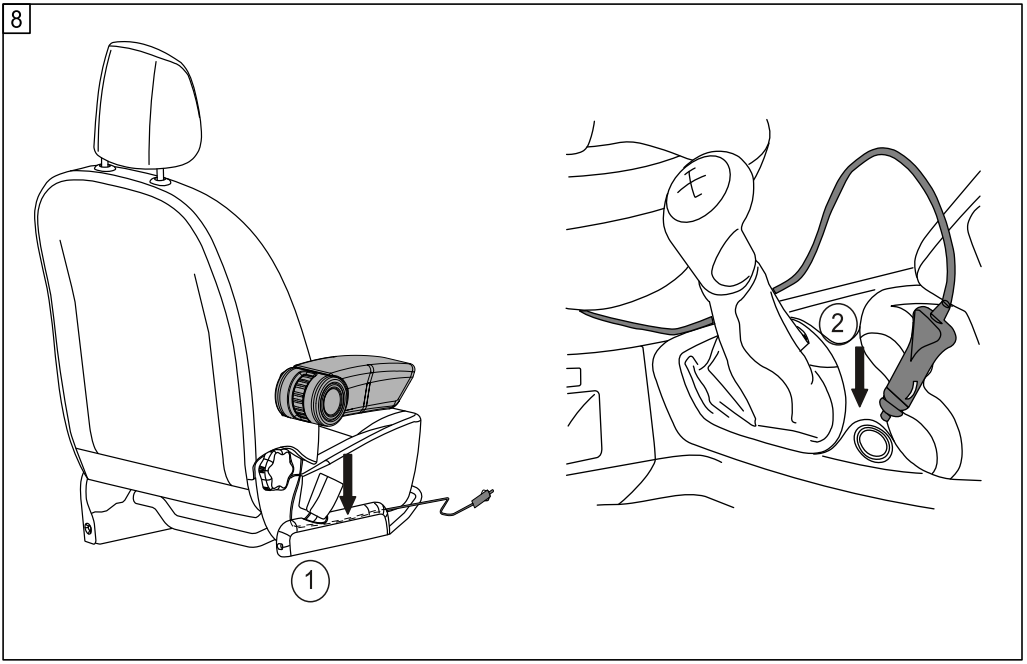
8
1
2

20
PAP
RACCOLTA
CARTA
22
PAP
RACCOLTA
CARTONE
FR