armster3 seat mounted Plug & Play

DACIA **DUSTER**
2018-2019 LHD
(WITH original elbowrest)

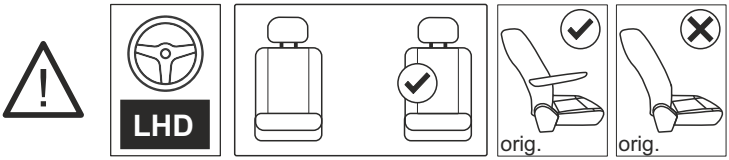

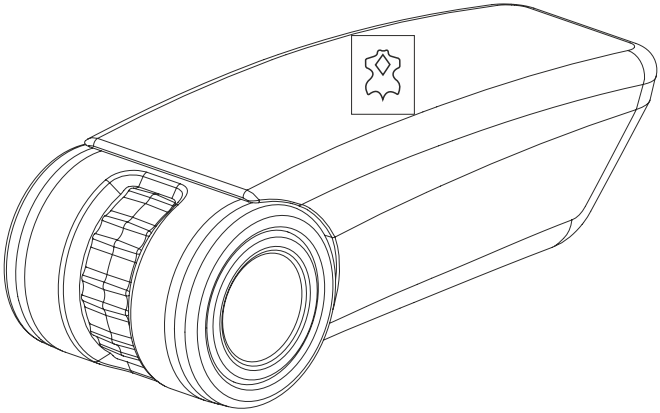

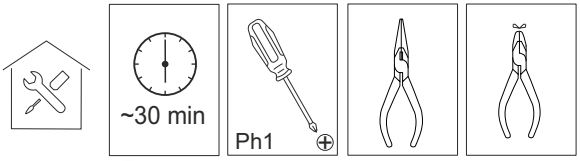

easy
medium
difficult

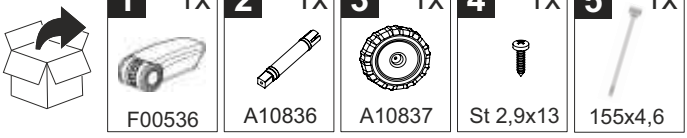

V01074 - 20240219

rati
www.rati.hu

1

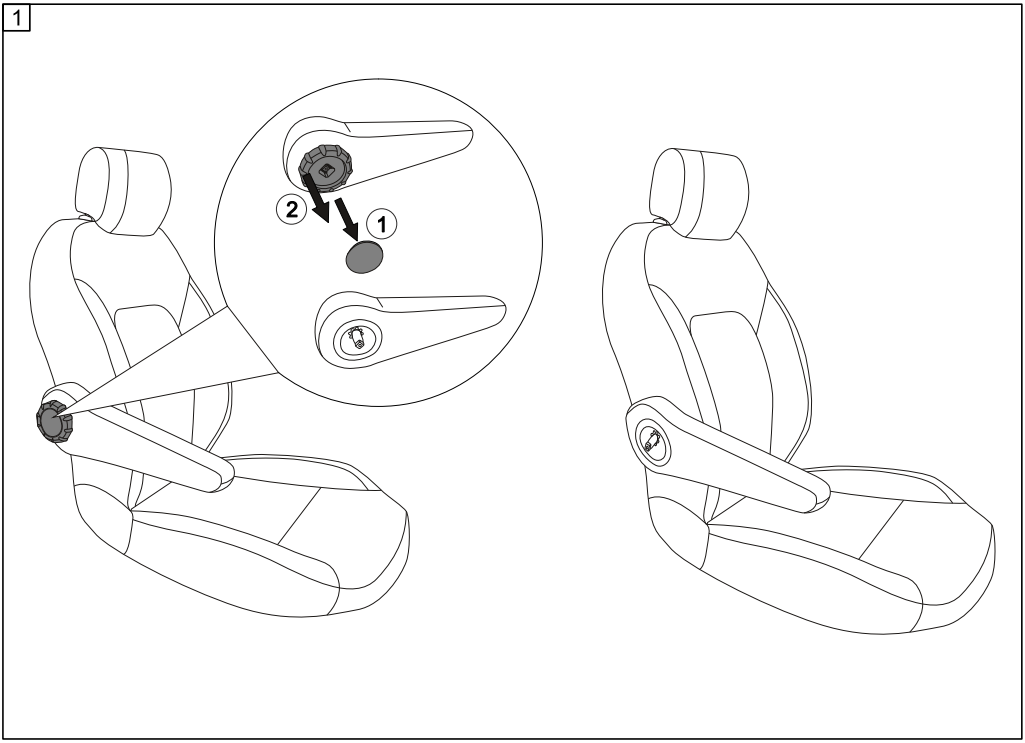

2

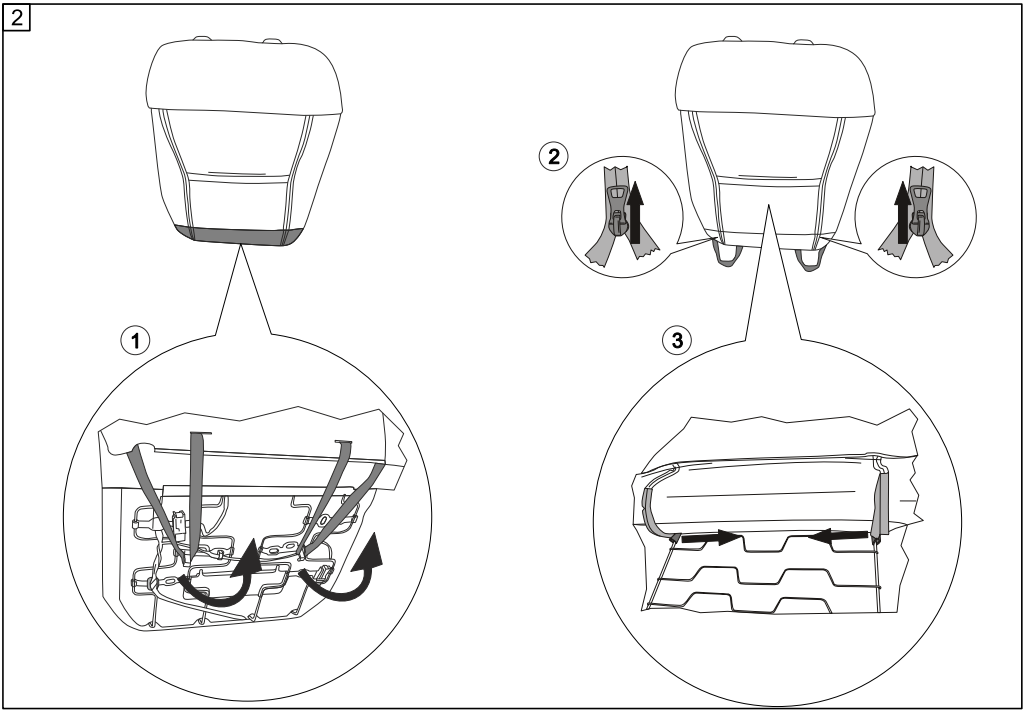

3

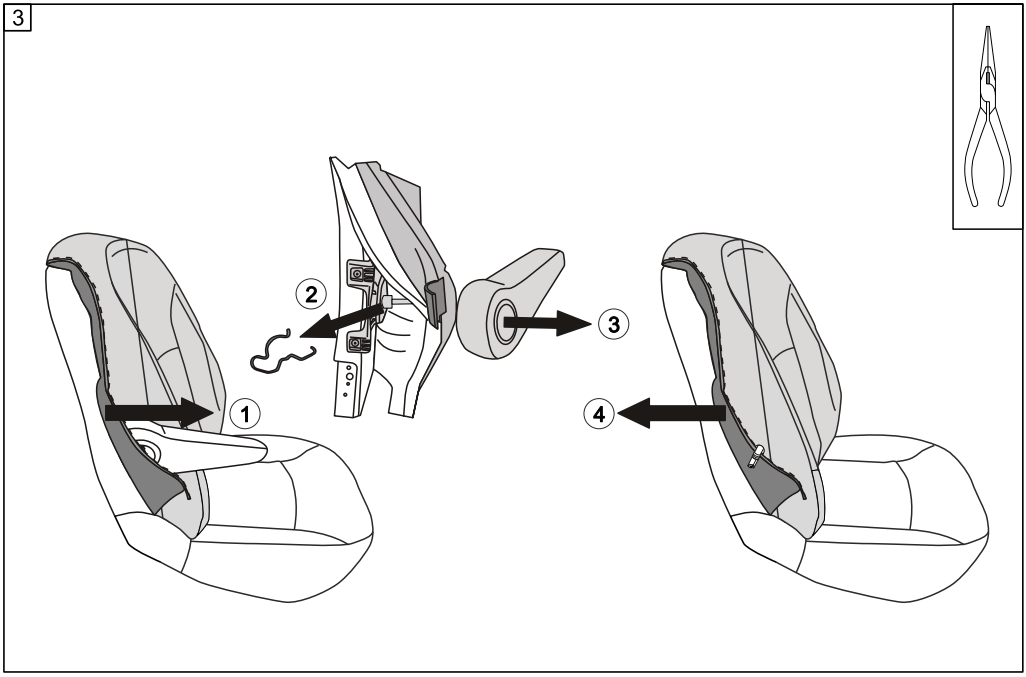

4

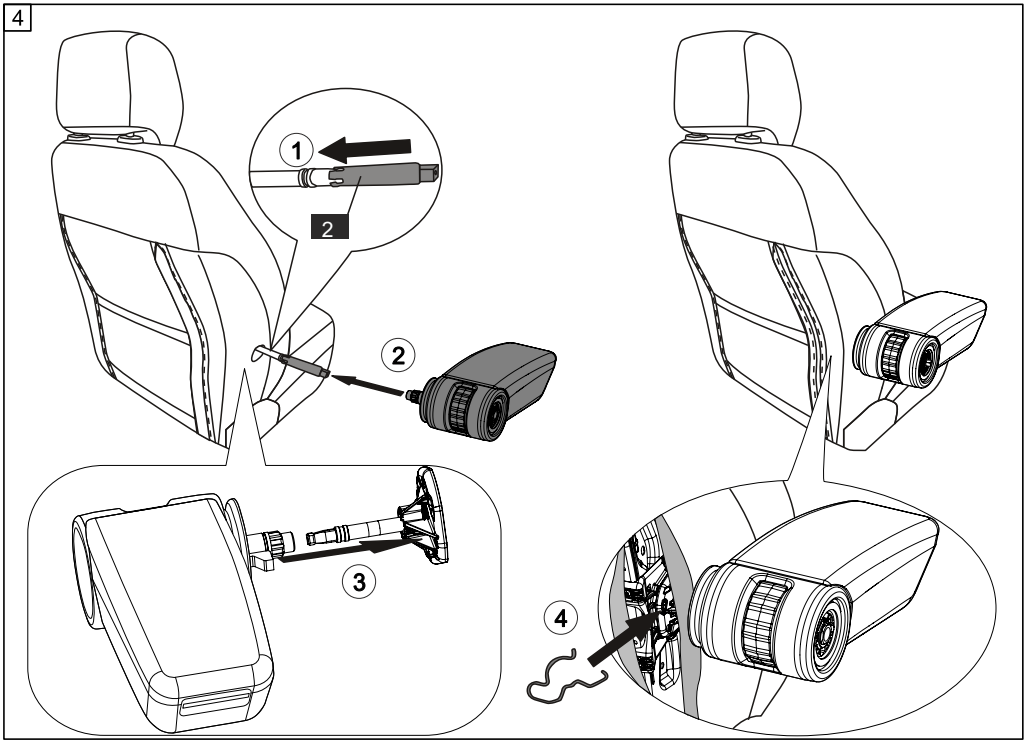

5

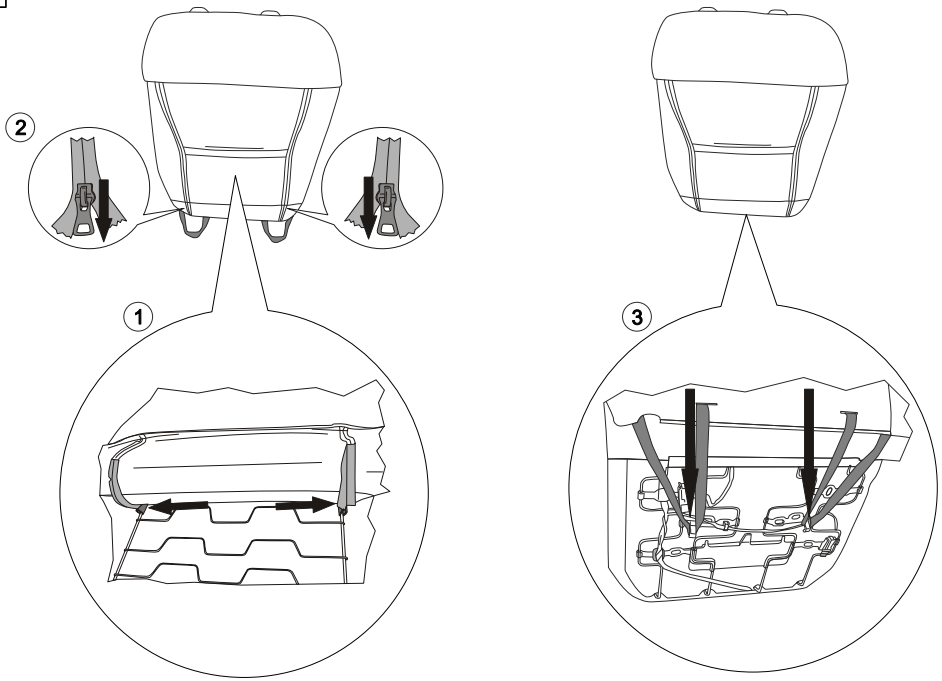

6

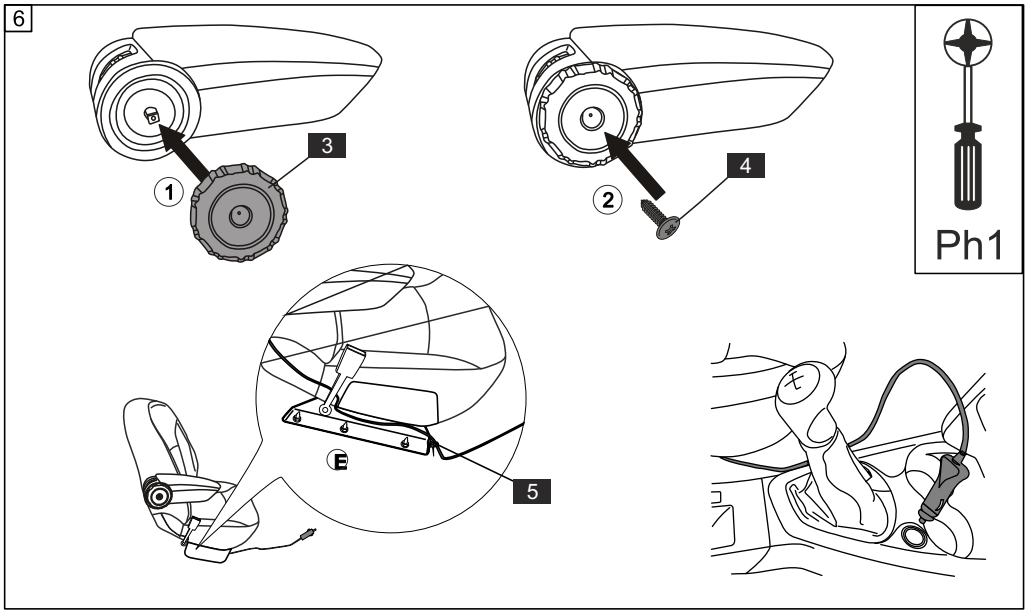

20 PAP RACCOLTA CARTA
22 PAP RACCOLTA CARTONE
FR