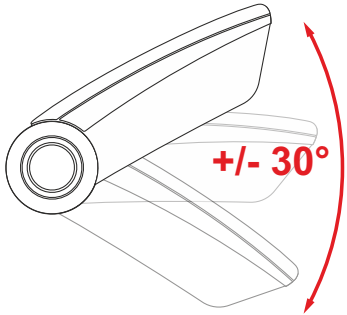

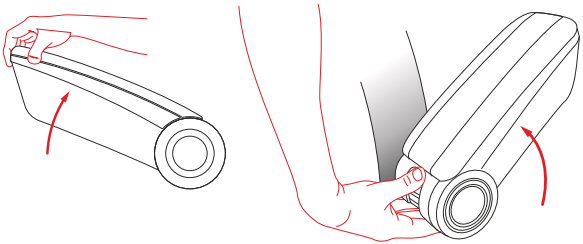

WARRANTY

3 YEAR

RENAULT DACIA

DUSTER

↦12/2017

Part number	877001871R	877007796R

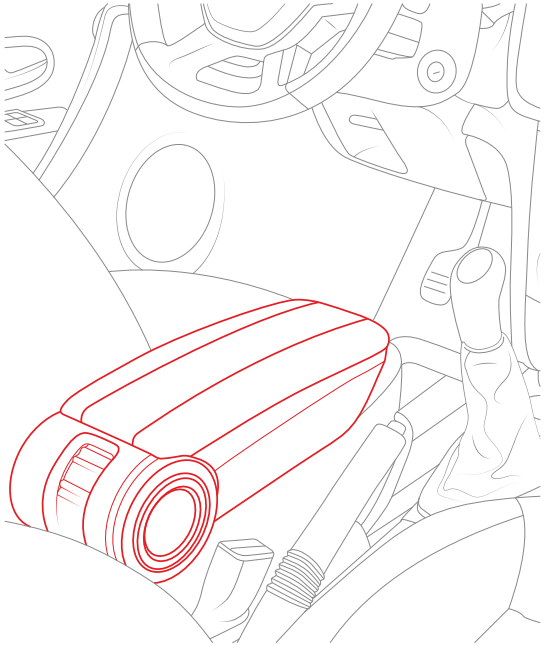

manufactured by

rati

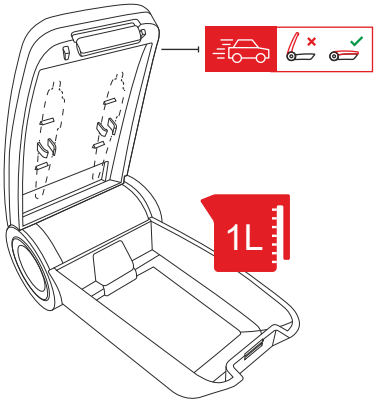
1L

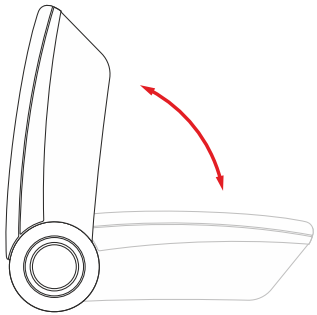

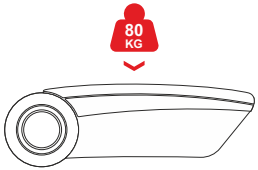
80
KG

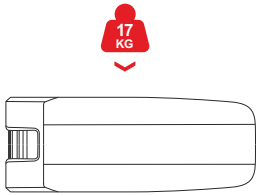
17
KG

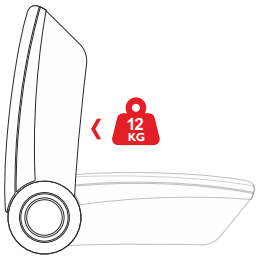
12
KG